Euromaid

User Manual

126L Bar Fridge
EBF126W
EBF126BK
EBF126S

euromaid.com.au

Content

1. Safety Information	Page 1-5
2. Overview	Page 6
3. Reverse Door	Page 7-9
4. Installation	Page 10-11
5. Daily Use	Page 12-15
6. Product Information	Page 16
7. Warranty	Page 18

⚠ Safety information

In the interest of your safety and to ensure the correct use, before installing and first using the appliance, read this user manual carefully, including its hints and warnings. To avoid unnecessary mistakes and accidents, it is important to ensure that all people using the appliance are thoroughly familiar with its operation and safety features. Save these instructions and make sure that they remain with the appliance if it is moved or sold, so that everyone using it through its life will be properly informed on appliance use and safety.
For the safety of life and property keep the precautions of these user's instructions as the manufacturer is not responsible for damages caused by omission.

Children and vulnerable people safety

- This appliance is not intended for use by persons (including children) with reduced physical, sensory or mental capabilities, or lack of experience and knowledge, unless they have been given supervision or instruction concerning use of the appliance by a person responsible for their safety.
- Children should be supervised to ensure that they do not play with the appliance.
- Cleaning and user maintenance shall not be made by children.
- Keep all packaging well away from children. There is risk of suffocation.
- If you are discarding the appliance pull the plug out of the socket, cut the connection cable (as close to the appliance as you can) and remove the door to prevent playing children to suffer electric shock or to close themselves into it.
- If this appliance featuring magnetic door seals is to replace an older appliance having a spring lock (latch) on the door or lid, be sure to make that spring lack unusable before you discard the old appliance. This will prevent it from becoming a death trap for a child.

General safety

⚠**WARNING!** Keep ventilation openings, in the appliance enclosure or in the built-in structure, clear of obstruction.

⚠**WARNING!** Do not use mechanical devices or other means to accelerate the defrosting process, other than those recommended by the manufacturer.

⚠**WARNING!** Do not damage the refrigerant circuit.

⚠ Safety information

⚠**WARNING!** Do not use other electrical appliances (such as ice cream makers) inside of refrigerating appliances, unless they are approved for this purpose by the manufacture.

⚠**WARNING!** Do not touch the light bulb if it has been on for a long period of time because it could be very hot.[1)]

- Do not store explosive substances such as aerosol cans with a flammable propellant in this appliance.
- The refrigerant isobutane (R600a) is contained within the refrigerant circuit of the appliance, a natural gas with a high level of environmental compatibility, which is nevertheless flammable.
- During transportation and installation of the appliance, be certain that none of the components of the refrigerant circuit become damaged.
  - avoid open flames and sources of ignition
  - thoroughly ventilate the room in which the appliance is situated
- It is dangerous to alter the specifications or modify this product in any way. Any damage to the cord may cause a short circuit, fire and/or electric shock.
- This appliance is intended to be used in household and similar applications such as
  - staff kitchen areas in shops, offices and other working environments;
  - farm houses and by clients in hotels, motels and other residential type environments;
  - bed and breakfast type environments;
  - catering and similar non-retail applications.

⚠**WARNING!** Any electrical components(plug, power cord, compressor and etc.) must be replaced by a certified service agent or qualified service personnel.

⚠**WARNING!** The light bulb supplied with this appliance is a “special use lamp bulb” usable only with the appliance supplied. This “special use lamp” is not usable for domestic lighting.[1)]

1) If there is a light in the compartment.

⚠ Safety information

- Power cord must not be lengthened.
- Make sure that the power plug is not squashed or damaged by the back of the appliance. A squashed or damaged power plug may overheat and cause a fire.
- Make sure that you can come to the mains plug of the appliance.
- Do not pull the mains cable.
- If the power plug socket is loose, do not insert the power plug. There is a risk of electric shock or fire.
- You must not operate the appliance without the lamp.
- This appliance is heavy. Care should be taken when moving it.
- Do not remove nor touch items from the freezer compartment if you hands are damp/wet, as this could cause skin abrasions or frost/freezer burns.
- Avoid prolonged exposure of the appliance to direct sunlight.

Daily use

- Do not put hot on the plastic parts in the appliance.
- Do not place food products directly against the rear wall.
- Frozen food must not be re-frozen once it has been thawed out.[1)]
- Store pre-packed frozen food in accordance with the frozen food manufacture's instructions.[1)]
- Appliance's manufactures storage recommendations should be strictly adhered to. Refer to relevant instructions.
- Do not place carbonated of fizzy drinks in the freezer compartment as it creates pressure on the container, which may cause it to explode, resulting in damage to the appliance.[1)]
- Ice lollies can cause frost burns if consumed straight from the appliance.[1)]

Care and cleaning

- Before maintenance, switch off the appliance and disconnect the mains plug from the mains socket.
- Do not clean the appliance with metal objects.
- Do not use sharp objects to remove frost from the appliance. Use a plastic scraper.[1)]
- Regularly examine the drain in the refrigerator for defrosted water. If necessary, clean the drain. If the drain is blocked, water will collect in te bottom of the appliance.[2)]

1) If there is a freezer compartment.
2) If there is a fresh-food storage compartment.

⚠ Safety information

Installation

Important! For electrical connection carefully follow the instructions given in specific paragraphs.

- Unpack the appliance and check if there are damages on it. Do not connect the appliance if it is damaged. Report possible damages immediately to the place you bought it. In that case retain packing.
- It is advisable to wait at least four hours before connecting the appliance to allow the oil to flow back in the compressor.
- Adequate air circulation should be around the appliance, lacking this leads to overheating. To achieve sufficient ventilation follow the instructions relevant to installation.
- Wherever possible the spacers of the product should be against a wall to avoid touching or catching warm parts (compressor, condenser) to prevent possible burn.
- The appliance must not be located close to radiators or cookers.
- Make sure that the mains plug is accessible after the installation of the appliance.

Service

- Any electrical work required to do the servicing of the appliance should be carried out by a qualified electrician or competent person.
- This product must be serviced by an authorized Service Center, and only genuine spare parts must be used.
- WARNING! - It is hazardous for anyone other than an Authorised Service Person to service this appliance. In Queensland, the authorised Service Person MUST hold a Gas Work Authorisation for hydrocarbon refrigerants, to carry out Servicing or repairs where the gas system is being opened or charged.
- This appliance contains R600a refrigerant which is flammable.

Energy saving

- Don’t put hot food in the appliance;
- Don’t pack food close together as this prevents air circulating;
- Make sure food don’t touch the back of the compartment(s);
- If electricity goes off, don’t open the door(s);
- Don’t open the door(s) frequently;
- Don’t keep the door(s) open for too long time;
- Don’t set the thermostat on exceeding cold temperatures;
- Some accessaries, such as drawers, can be removed to get larger storage volume and lower energy consumption.

Environment Protection

This appliance does not contain gasses which could damage the ozone layer, in either its refrigerant circuit or insulation materials. The appliance shall not be discarded together with the urban refuse and rubbish. The insulation foam contains flammable gases: the appliance shall be disposed according to the appliance regulations to obtain from your local authorities. Avoid damaging the cooling unit, especially the heat exchanger. The materials used on this appliance marked by the symbol ♲ are recyclable.

The symbol on the product or on its packaging indicates that this product may not be treated as household waste. Instead it should be taken to the appropriate collection point for the recycling of electrical and electronic equipment. By ensuring this product is disposed of correctly, you will help prevent potential negative consequences for the environment and human health, which could otherwise be caused by inappropriate waste handling of this product. For more detailed information about recycling of this product, please contact your local council, your household waste disposal service or the shop where you purchased the product.

Packaging materials

The materials with the symbol are recyclable. Dispose the packaging in a suitable collection containers to recycle it.

Disposal of the appliance

1. Disconnect the mains plug from the mains socket.
2. Cut off the mains cable and discard it.

Overview

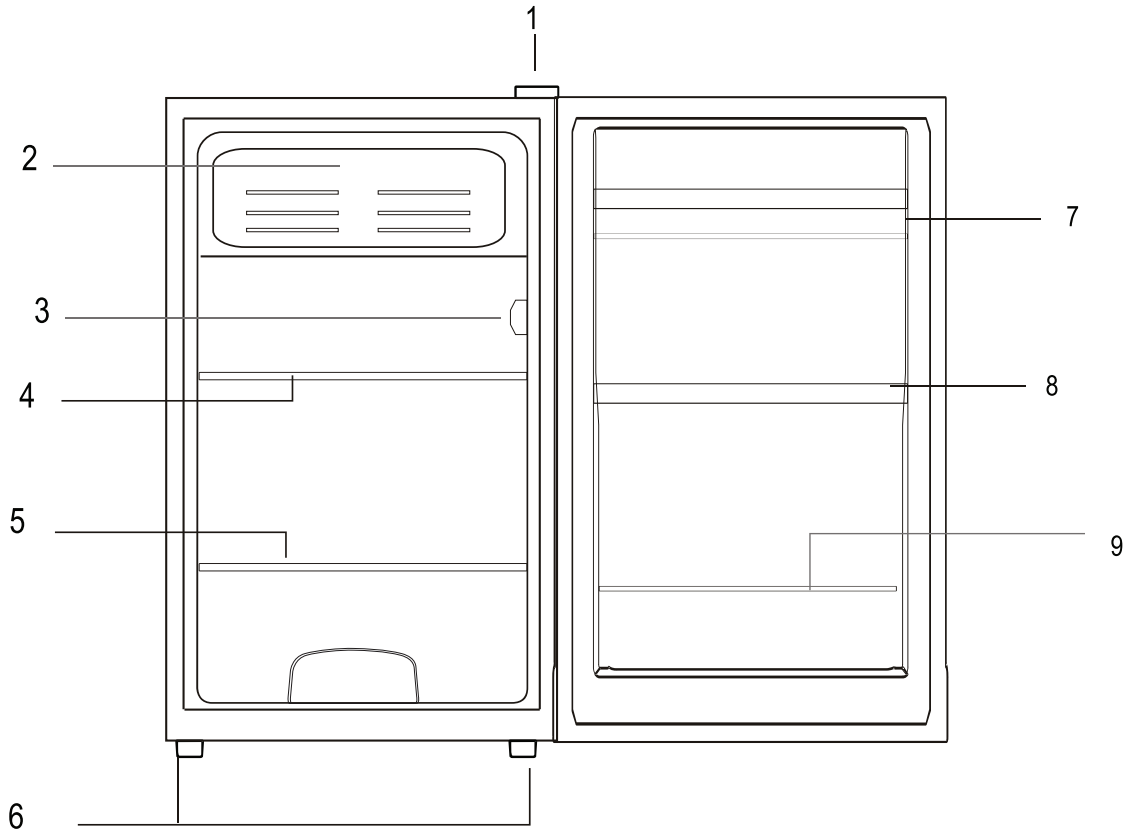

1. Door Hinge
2. Freezer Compartment
3. Thermostat Control
4. Adjustable Shelf
5. Small Glass Shelf
6. Levelling Feet
7. Upper Door Bin
8. Middle Door Bin
9. Lower Door Bin

This illustration is only a guide, for full details please check your appliance.

Reverse Door

Tools required: Philips screwdriver, Flat bladed screwdriver.

- Ensure the unit is unplugged and empty.
- To take the door off, it is necessary to tilt the unit backwards. You should rest the unit on something solid so that it will not slip during the door reversing process.
- All parts removed must be saved to do the reinstallation of the door.
- Do not lay the unit flat on its back as this may damage the coolant system.
- It's better that 2 people handle the unit during assembly.

1. Remove the top right hinge cover.

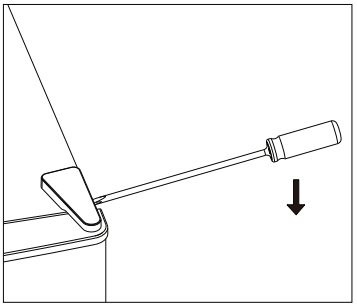

2. Undo the screws. Then remove the hinge bracket.

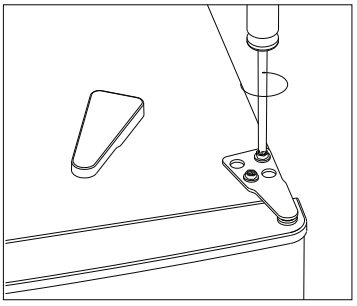

3. Remove the top left screw cover.

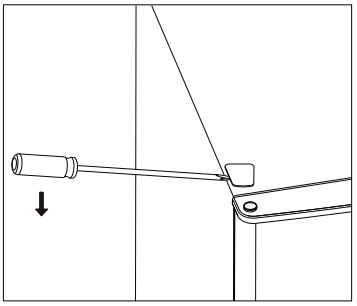

4. Move the core cover from left side to right side. And then lift the upper door and place it on a padded surface to prevent it from scratching.

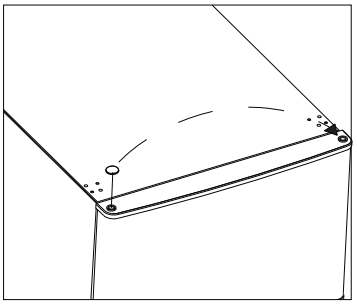

Reverse Door

5. Unscrew bottom hinge and remove adjustable feet. Then remove the adjustable feet from the other side.

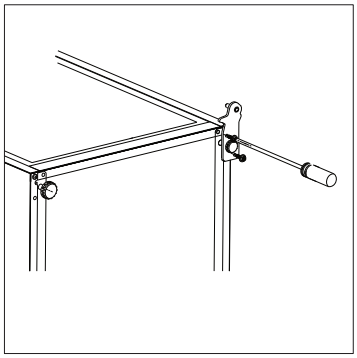

6. Unscrew and remove the bottom hinge pin with a flat screw driver. Turn the bracket over and replace the pin.

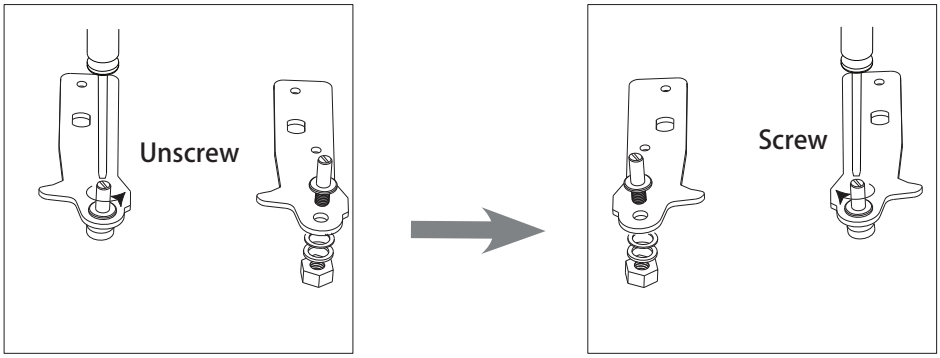

7.Refit the bottom hinge. Replace the adjustable feet.

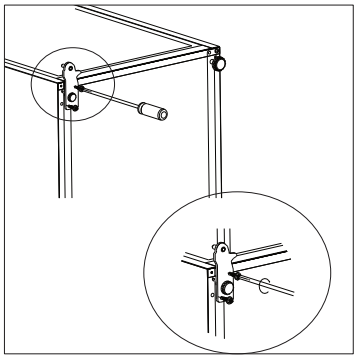

8. Place the door back on. Ensure the door is aligned horizontally and vertically so that the seals are closed on all sides.
9. Insert the hinge bracket and screw it to the top of the unit.

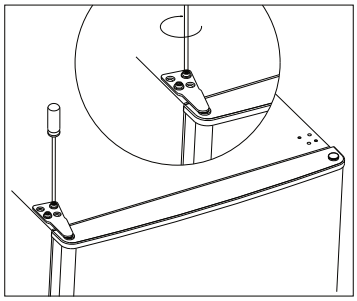

Reverse Door

10.Refit the hinge cover and the screw cover.

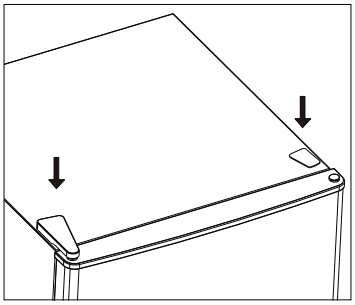

Installation

Space Requirement

- Keep enough space of door open.
- Keep at least 50mm gap at two sides.
- Keep at least 40mm gap at rear.
- Keep at least 100mm gap above for overhead cabinets.
- Product Dimensions: W495 x D560 x H838mm.

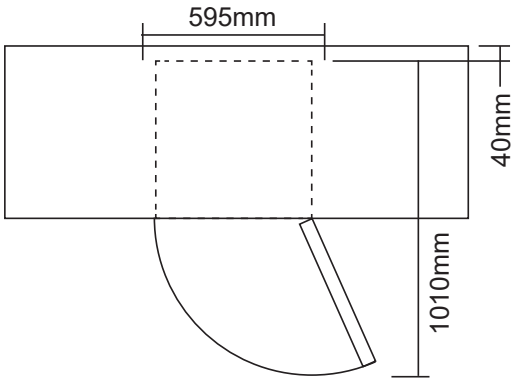

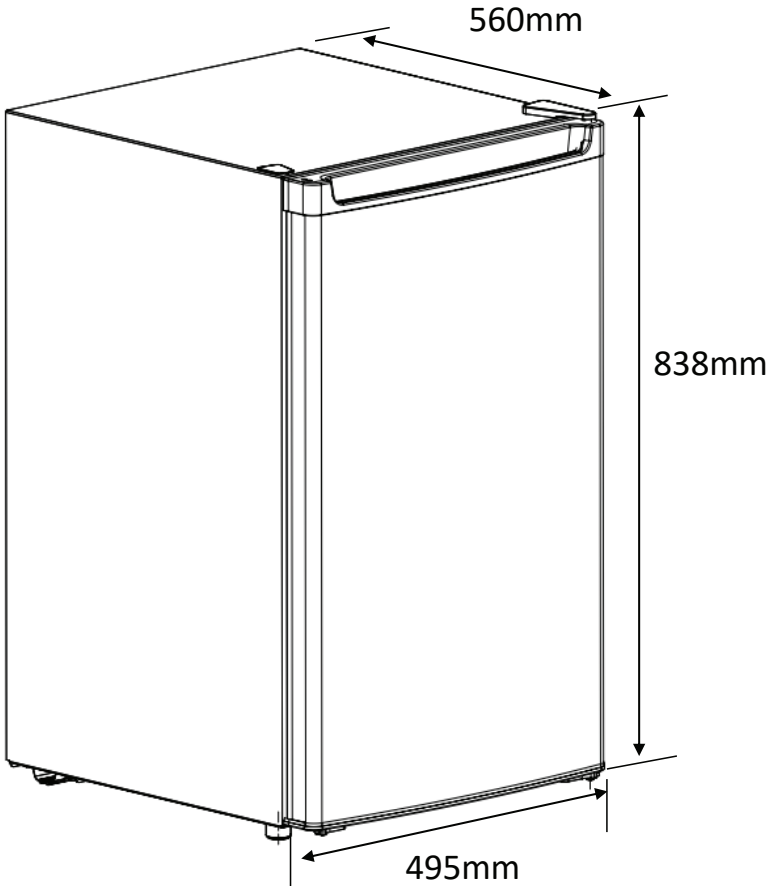

Levelling the unit

To do this adjust the two levelling feet at front of the unit.

If the unit is not level, the doors and magnetic seal alignments will not be covered properly.

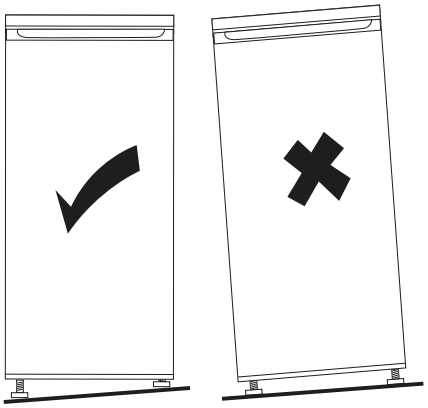

Installation

Positioning

Install this appliance at a location where the ambient temperature corresponds to the climate class indicated on the rating plate of the appliance:

Climate class	Ambient temperature
SN	+10°C to +32°C
N	+16°C to +32°C
ST	+16°C to +38°C
T	+16°C to +43°C

Location

The appliance should be installed well away from sources of heat such as radiators, boilers, direct sunlight etc. Ensure that air can circulate freely around the back of the cabinet. To ensure best performance, if the appliance is positioned below an overhanging wall unit, the minimum distance between the top of the cabinet and the wall unit must be at least 100 mm. Ideally, however, the appliance should not be positioned below overhanging wall units. Accurate leveling is ensured by one or more adjustable feet at the base of the cabinet.

Warning! It must be possible to disconnect the appliance from the mains power supply; the plug must therefore be easily accessible after installation.

Electrical connection

Before plugging in, ensure that the voltage and frequency shown on the rating plate correspond to your domestic power supply. The appliance must be earthed. The power supply cable plug is provided with a contact for this purpose. If the domestic power supply socket is not earthed, connect the appliance to a separate earth in compliance with current regulations, consulting a qualified electrician.
The manufacturer declines all responsibility if the above safety precautions are not observed.
This appliance complies with the E.E.C. Directives.

Daily Use

First use

Cleaning the interior

Before using the appliance for the first time, wash the interior and all internal accessories with lukewarm water and some neutral soap so as to remove the typical smell of a brand new product, then dry thoroughly.

Important! Do not use detergents or abrasive powders, as these will damage the finish.

Temperature Setting

- Plug in your appliance. The internal temperature is controlled by a thermostat. There are 8 settings . 1 is warmest setting and 7 is coldest setting and 0 is off.
- The appliance may not operate at the correct temperature if it is in a particularly hot environment or if you open the door often.

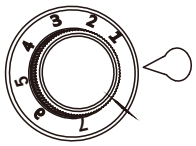

Freezing fresh food

- The freezer compartment is suitable for freezing fresh food and storing frozen and deep-frozen food for a long time.
- Place the fresh food to be frozen in the freezer compartment.
- The freezing process lasts 24 hours: during this period do not add other food to be frozen.

Storing frozen food

When first starting-up or after a period out of use, before putting the product in the compartment let the appliance run at least 2 hours on the higher settings.

Important! In the event of accidental defrosting, for example the power has been off,
The defrosted food must be consumed quickly or cooked immediately and then re-frozen
(after cooked).

Thawing

Deep-frozen or frozen food, prior to being used, can be thawed in the fridge compartment or at room temperature, depending on the time available for this operation.
Place the frozen food in a dish or bowl to avoid thawed liquid making a mess.

Accessories

Movable shelves

The walls of the refrigerator are equipped with a series of runners so that the shelves can be positioned as desired.

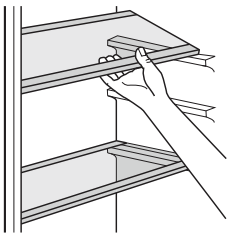

Daily Use

Helpful hints and tips

To help you make the most of the freezing process, here are some important hints:

- the freezing process takes 24 hours. No further food to be frozen should be added during this period;
- only freeze top quality, fresh and thoroughly cleaned, foodstuffs;
- prepare food in small portions to enable it to be rapidly and completely frozen and to make it possible subsequently to thaw only the quantity required;
- wrap up the food in aluminium foil or polythene and make sure that the packages are airtight;
- do not allow fresh, unfrozen food to touch food which is already frozen, thus avoiding a rise in temperature of the latter;
- lean foods store better and longer than fatty ones; salt reduces the storage life of food;
- water ices, if consumed immediately after removal from the freezer compartment, can possibly cause the skin to be freeze burnt;
- it is advisable to show the freezing in date on each individual pack to enable you to keep tab of the storage time.

Hints for storage of frozen food

To obtain the best performance from this appliance, you should:

- make sure that the commercially frozen foodstuffs were adequately stored by the retailer;
- be sure that frozen foodstuffs are transferred from the food store to the freezer in the shortest possible time;
- not open the door frequently or leave it open longer than absolutely necessary.
- once defrosted, food deteriorates rapidly and cannot be re-frozen;
- do not exceed the storage period indicated by the food manufacture.

Hints for fresh food refrigeration

To obtain the best performance:

- Do not store warm food or evaporating liquids in the refrigerator
- Cover or wrap the food, particularly if it has a strong flavour
- Meat (all types): wrap in polythene bags and place on the glass shelves above the vegetable drawer.
- For safety, store in this way only one or two days at the most.
- Cooked foods, cold dishes, etc…: these should be covered and may be placed on any shelf.
- Fruit and vegetables: these should be thoroughly cleaned and placed in the special drawer(s) provided.
- butter and cheese: these should be placed in special airtight containers or wrapped in aluminum foil or polythene bags to exclude as much air as possible.
- Milk bottle: these should have a cap and should be stored in the balconies on the door.
- Bananas, potatoes, onions and garlic, if not packed, must not be kept in the fridge.

Cleaning

For hygienic reasons the appliance interior, including interior accessories, should be cleaned regularly.

⚠ **Caution!** The appliance should not be connected to the mains during cleaning. Danger of electrical shock! Before cleaning switch the appliance off and remove the plug from the mains, or switch off or turn off the circuit breaker or fuse. Never clean the appliance with a steam cleaner. Moisture could accumulate in electrical components, danger of electrical shock! Hot vapors can lead to the damage of plastic parts. The appliance must be dry before it is placed back into service.

Important! Ethereal oils and organic solvents can attack plastic parts, e.g. lemon juice or the juice form orange peel, butyric acid, cleanser that contain acetic acid.

Daily Use

- Do not allow such substances to come into contact the appliance parts.
- Do not use any abrasive cleaners
- Remove the food from the freezer. Store them in a cool place, well covered.
- Switch the appliance off and remove the plug from the mains, or switch off the circuit breaker or fuse.
- Clean the appliance and the interior accessories with a cloth and lukewarm water. After cleaning wipe with fresh water and rub dry.
- After everything is dry place appliance back into service.

Defrosting of the freezer

The freezer compartment, will become progressively covered with frost. This should be removed.
Never use sharp metal tools to scrape off frost from the freezer as you could damage it.
However, when the ice becomes very thick on the inner liner, complete defrosting should be carried out as follows:

- remove the plug from the socket;
- remove all stored food, wrap it in several layers of newspaper and put it in a cool place;
- keep the door open, and placing a basin underneath of the appliance to collect the defrost water;
- when defrosting is completed, dry the interior thoroughly
- replace the plug in the power socket to run the appliance again.

Replace the lamp

⚠ **Caution**! Before replacing the lamp, disconnect the appliance from mains power supply.

Lamp specification is listed in rating label.
Follow below process to replace the lamp:

1. Set the temperature regulation knob at number “0” to switch off the appliance.
2. Unplug the appliance to make sure the appliance is disconnected from main power supply.
3. Remove the screw of the lamp cover.
4. Pull the lamp cover out.
5. Unscrew the lamp.
6. Fit new lamp according to the opposite direction, then replace the lamp cover and screw.
7. Plug in the appliance and regulate the knob to right position.

Daily Use

Troubleshooting

Caution! Before troubleshooting, disconnect the power supply. Only a qualified electrician or competent person must do the troubleshooting that is not in this manual.

Important! There are some sounds during normal use (compressor, refrigerant circulation).

Problem	Possible cause	Solution
Appliance does not work	Temperature regulation knob is set at number “0”.	Set the knob at other number to switch on the appliance.
	Mains plug is not plugged in or is loose	Insert mains plug.
	Fuse has blown or is defective	Check fuse, replace if necessary.
	Socket is defective	Mains malfunctions are to be corrected by an electrician.
The food is too warm.	Temperature is not properly adjusted.	Please look in the initial Temperature Setting section.
	Door was open for an extended period.	Open the door only as long as necessary.
	A large quantity of warm food was placed in the appliance within the last 24 hours.	Turn the temperature regulation to a colder setting temporarily.
	The appliance is near a heat source.	Please look in the installation location section.
Appliance cools too much	Temperature is set too cold.	Turn the temperature regulation knob to a warmer setting temporarily.
Unusual noises	Appliance is not level.	Re-adjust the feet.
	The appliance is touching the wall or other objects.	Move the appliance slightly.
	A component, e.g. a pipe, on the rear of the appliance is touching another part of the appliance or the wall.	If necessary, carefully bend the component out of the way.
Side panel is hot	Condenser is inside the panel.	It’s normal.

If the malfunction shows again, contact the Service Center.

Product Information

Model No.: EBF126W
EBF126BK
EBF126S

Product Dimensions: W495 x xD560 x H838 mm

Gross Volume: 126L
Storage Volume: 124L
Evaporator compartment volume: 15L

220-240V ~50Hz
Rated current: 0.55A
Climate class: T
Refrigerant: R600a (29g)
Insulation blowing gas: Cyclopentane

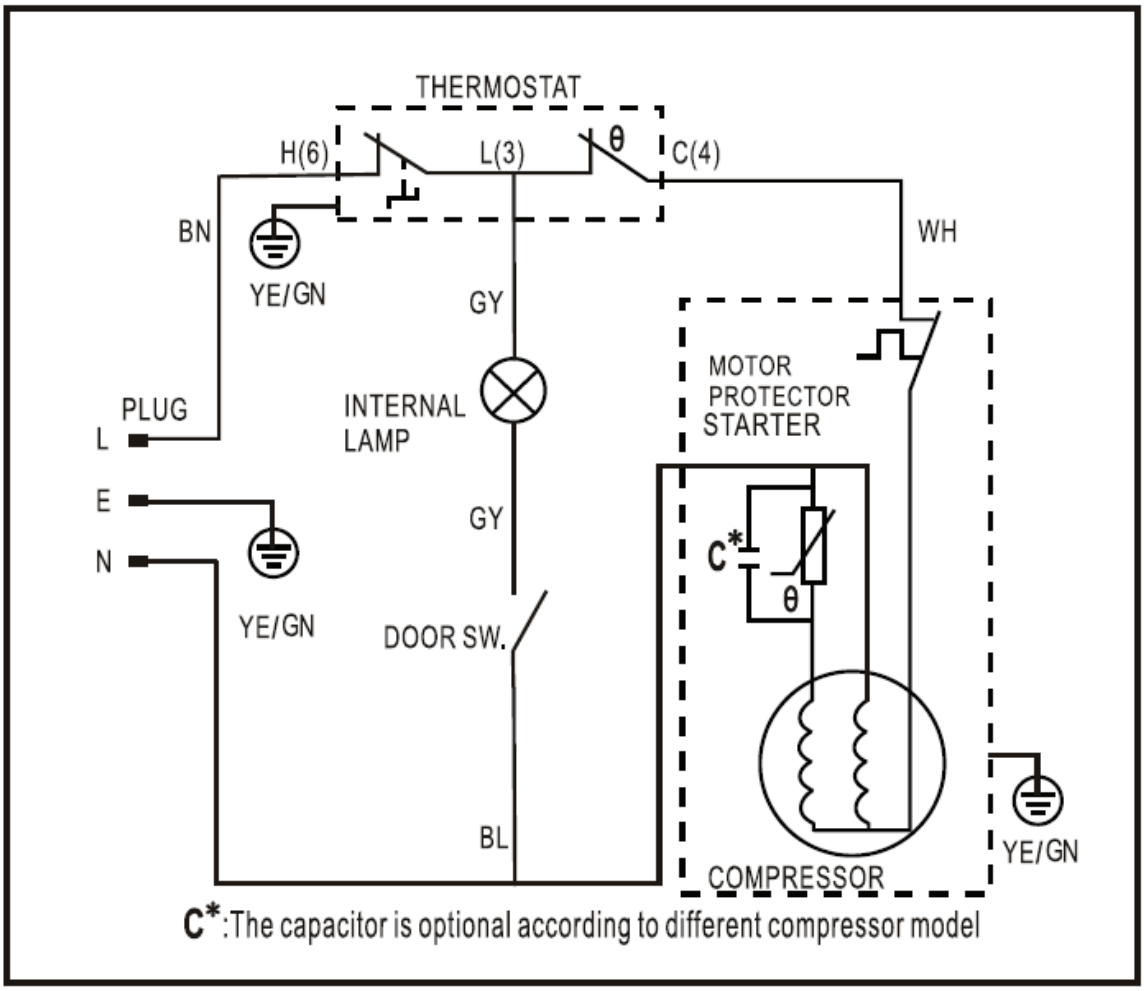

NOTES

MANUFACTURER GUARANTEE

This warranty is provided in Australia by Glen Dimplex Australia Pty Limited ABN 69 118 275 460 **(Phone number 1300 556 816)** and in New Zealand by Glen Dimplex New Zealand Limited NZBN 9429000069823 **(Phone number 09 274 8265)** in respect of the **Euromaid** product.

1. Euromaid Express Warranty

Subject to the exclusions below, we warrant that the product will not have any electrical or mechanical breakdowns within:

a) In the case of **Euromaid** products used for personal, domestic or household purposes, a period of **2 years** from the date the product is purchased as a brand-new product from a retailer located in Australia / New Zealand.

b) In the case of **Euromaid** products used for purposes other than personal, domestic or household purposes (including business or commercial use), a period of 90 days from the date the product is purchased as a brand-new product from a retailer located in Australia / New Zealand. **Euromaid** products are designed and intended for domestic use only; and

c) All warranty repairs must be carried out by Glen Dimplex or their nominated service agent

Note: warranty periods detailed above may vary in line with agreements with select retail and builder partners and may differ between Australia and New Zealand.

The benefits conferred by this express warranty are in addition to the Consumer Guarantees referred to in section 3 and any other statutory rights you may have under the Australian / New Zealand Consumer Law and/or other applicable laws.

2. Warranty exclusions

This express warranty does not apply where:

a) The product has been installed, used or operated otherwise than in accordance with the product manual or other similar documentation provided to you with the product;

b) The product requires repairs due to damage resulting from accident, misuse, incorrect installation, insect or vermin infestation, improper liquid spillage, cleaning or maintenance, unauthorised modification, use on an incorrect voltage, power surges and dips, voltage supply problems, tampering or unauthorised repairs by any persons, use of defective or incompatible accessories or exposure to abnormally corrosive conditions, events independent of human control which occurred after the goods left the control of Glen Dimplex;

c) The repair relates to the replacement of consumable parts such as fuses and bulbs or any other parts of the product which require routine replacement;

d) You are unable to provide us with reasonable proof of purchase for the product;

e) the breakdown occurs after the expiry of the express warranty period set out in section 1 or

f) the product was not purchased in Australia / New Zealand as a brand-new product.

3. Consumer guarantees

Our goods come with guarantees that cannot be excluded under the Australian / New Zealand Consumer Law. You are entitled to a replacement or refund for a major failure and for compensation for any other reasonably foreseeable loss or damage. You are also entitled to have the goods repaired or replaced if the goods fail to be of acceptable quality and the failure does not amount to a major failure.

4. How to make a claim

You may make a claim under this warranty through our website, contacting our customer care line or via email. Contact details for Glen Dimplex Australia and New Zealand can be found at the end of this document

To make a valid claim under this warranty, you must:

a) Lodge the claim with us as soon as possible and no later than 14 days after you first become aware of the breakdown;

b) Provide us with the product serial number;

c) Provide us with reasonable proof of purchase for the product. This can take the form of a store receipt, new home handover form or other payment receipt documentation; and

d) If required by us, provide us (or any person nominated by us) with access to the premises at which the product is located at times nominated by us (so that we can inspect the product).

5. Warranty claims

If you make a valid claim under this warranty and none of the exclusions set out in section 2 apply, we will, at our election, either repair the product or replace the product with a product of identical specification (or where the product is superseded or no longer in stock, with a product of as close a specification as possible).

Goods presented for repair may be replaced by refurbished goods of the same type rather than being repaired. Refurbished parts may be used to repair the goods.
Products are designed and supplied for normal domestic use. We will not be liable to you under this warranty for business loss or damage of any kind whatsoever.

Glen Dimplex Australia Pty Ltd

www.glendimplex.com.au

Australia
Ph: 1300 556 816
customer.care.ha@glendimplex.com.au

Glen Dimplex New Zealand Ltd

www.glendimplex.co.nz

New Zealand
Ph: 09 274 8265
nztechserv@glendimplex.co.nz

READ THE INSTRUCTION BOOKLET BEFORE INSTALLING AND USING THE APPLIANCE.

The manufacturer will not be responsible for any damage to property or to persons caused by incorrect installation or improper use of the appliance.
The manufacturer is not responsible for any inaccuracies, due to printing or transcription errors, contained in this manual. In addition, the appearance of the figures reported is also purely indicative.

The manufacturer reserves the right to make changes to its products when considered necessary and useful, without affecting the essential safety and operating characteristics.
Glen Dimplex constantly seeks ways to improve the specifications and designs of their products. Whilst every effort is made to produce up to date literature, this document should not be regarded as an infallible guide. Actual product only should be used to derive cut out sizes.

All appliances must be installed by a qualified person/s with adherence to the relevant electrical, plumbing and building codes, with compliance being issued as required by state or national legislation.

Additionally, all upright cookers must have the anti-tilt device installed correctly in adherence to the relevant standards by a licenced installer.

For maximum effectiveness and efficiency all rangehoods should be installed with the use of ductwork, by a licenced installer with adherence to the relevant state and national building codes and regulations.

All Glen Dimplex appliances are for Domestic use only, and must be installed by a licence installer into Domestic Applications only, without exception and to the required Authorities guidelines. Any installation outside of this will VOID warranty. Alfresco areas are not a Domestic application.

Euromaid

Distributed by:

Glen Dimplex Australia Pty Ltd

www.glendimplex.com.au

Glen Dimplex New Zealand Ltd

www.glendimplex.co.nz

For service advice, please contact the Customer Care Centre by phone or email below.

Australia
Ph: 1300 556 816
customer.care.ha@glendimplex.com.au

New Zealand
Ph: 09 274 8265
nztechserv@glendimplex.co.nz

VERSION 1 REVISION 20200402